ROJO FLOAT VALVE
PARTS IDENTIFICATION SHEET

ROJO FLOAT VALVE

20 L / MIN

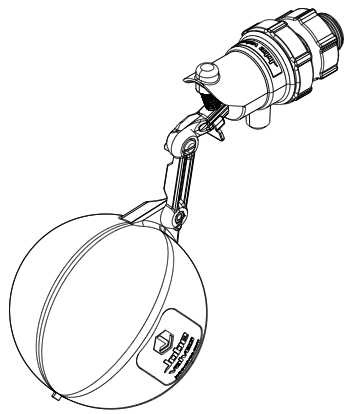

CODE: RJV

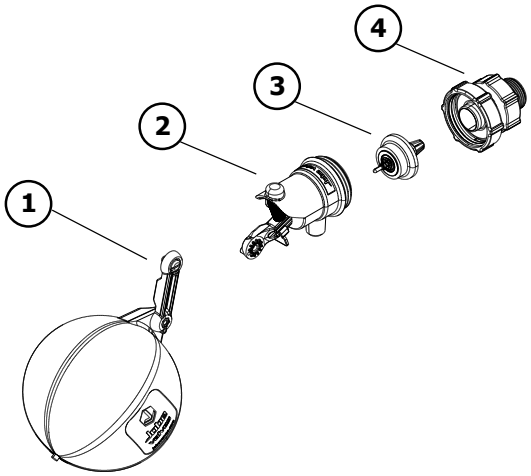

	CODE	DESCRIPTION
1	RJP1	Float & Connection
2	RJP2A	Body Assembly
3	RJP3A	Inner Cartridge Assembly
	RJP3B	Inner Cartridge Assembly High Flow (L/P)
4	RJP415	15mm (½") Tail Assembly
	RJP420	20mm (¾") Tail Assembly
	RJP420E	20mm (¾") NPT Tail Assembly

1

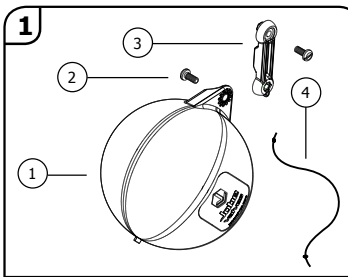

	CODE	DESCRIPTION
1	RJP1010	70mm Float
	RJP1011	95mm Float
	RJP1012	125mm Float
2	RJP1020A	Arm Bolt Slot
	RJP1020B	Arm Bolt Phillips
3	RJP1030	Extension Arm 25mm
	RJP1031	Extension Arm 50mm
	RJP1032	Extension Arm 75mm
	RJP1033	Extension Arm 100mm
4	RJP1040	Float Cord

2

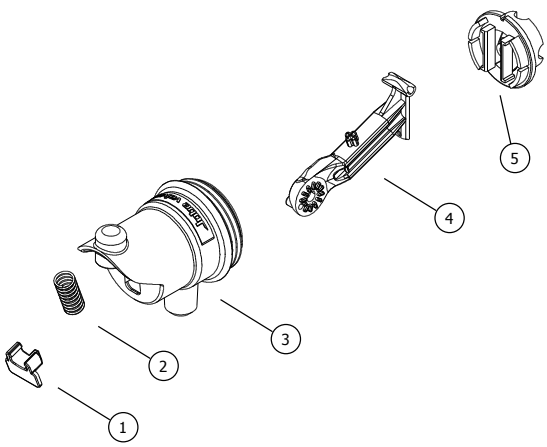

	CODE	DESCRIPTION
1	RJP2010	Lock-Off Switch
2	RJP2020	Arm Spring
3	RJP2030	Body
4	RJP2040	Arm Assembly
	RJP2041	Arm Assembly (HF)
5	RJP2050	Retainer

3

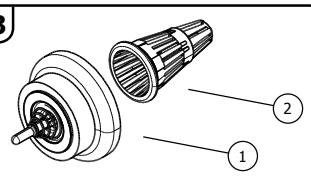

	CODE	DESCRIPTION
1	RJP3010	Inner Cartridge Std
	RJP3011	Inner Cartridge High Flow (LP)
2	RJP3020	Filter

4

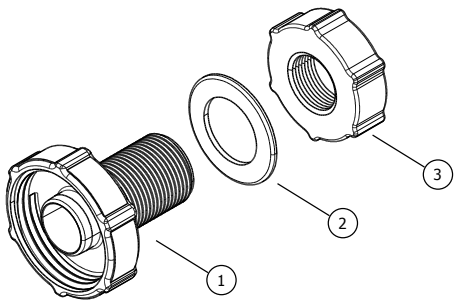

	CODE	DESCRIPTION
1	RJP4009	8mm (¼) Tail
	RJP4010	15mm (½") Tail
	RJP4011	20mm (¾") Tail
	RJP4012	20mm (¾") Tail NPT
2	RJP4020	15mm Seal Washer
	RJP4021	20mm Seal Washer
3	RJP4030	15mm (½") Backing Nut
	RJP4131	20mm (¾") Backing Nut